Electrolux PROFESSIONAL

Modular Cooking Range Line 700XP 6-Burner Gas Range on Gas Oven with Cupboard

ITEM #

MODEL #

NAME #

SIS #

AIA #

371005 (E7GCGL6C10) 6-Burner (5,5 kW each) gas Range on gas Oven (6 kW) and Cupboard

Short Form Specification

Item No.

To be installed on stainless steel feet with height adjustment up to 50 mm. High efficiency flower flame burners with flame regulator and protected pilot light. Flame failure device as standard on burners to protect against accidental extinguishing. Stainless steel oven chamber with 3 levels of runners to accomodate 2/1 GN shelves (2 steam pans). Ribbed oven base plate. Exterior panels in stainless steel with Scotch Brite finish. Pan supports in heavy duty cast iron. One piece pressed work top in 1.5 mm thick stainless steel. Right-angled side edges to allow flush-fitting junction between units.

APPROVAL:

Main Features

- Unit to have stainless steel feet with height adjustment up to 50 mm.
- The six 5.5 kW high efficiency flower flame burners allow the flame to adapt to different size pans.
- Cupboard compartment for storage of pots, pans, sheet pans etc.
- Gas appliance supplied for use with natural or LPG gas, conversion jets supplied as standard.
- Large sized pan support in cast iron (stainless steel as option) with long center fins to allow the use of the largest down to the smallest pans.
- Pan supports in cast iron are washable in a dishwasher.
- Burners to feature flame regulator.
- Flame failure device on each burner protects against gas leakage when accidental extinguishing of the flame occurs.
- Protected pilot light.
- Base compartment consists of a gas heated standard oven with stainless steel burners and self stabilizing flame positioned beneath the base plate. Stainless steel oven chamber to have 3 levels of runners to accomodate 2/1 GN shelves (2 steam pans) and ribbed enamelled steel base plate.
- Oven thermostat adjustable from 110 °C to 270 ° C.
- Double skinned door with pressed internal panel for heat insulation.
- IPx4 water protection.
- Control knobs provide smooth, continuous rotation from min to max power level.

Construction

- All exterior panels in Stainless Steel with Scotch Brite finishing.
- One piece pressed 1.5 mm work top in Stainless steel.
- Model has right-angled side edges to allow flush fitting joints between units, eliminating gaps and possible dirt traps.

Included Accessories

- 1 of GN2/1 chrome grid for static oven — PNC 164250
- 1 of Door for open base cupboard — PNC 206350

Optional Accessories

- GN2/1 chrome grid for static oven — PNC 164250 ❑
- Junction sealing kit — PNC 206086 ❑

• Draught diverter, 150 mm diameter	PNC 206132	❑
• Matching ring for flue condenser, 150 mm diameter	PNC 206133	❑
• Kit 4 wheels - 2 swivelling with brake - it is mandatory to install Base support and wheels	PNC 206135	❑
• Flanged feet kit	PNC 206136	❑
• Frontal kicking strip for concrete installation, 1200mm	PNC 206151	❑
• Frontal kicking strip for concrete installation, 1600mm	PNC 206152	❑
• Frontal kicking strip, 1200mm (not for refr-freezer base)	PNC 206178	❑
• Frontal kicking strip, 1600mm (not for refr-freezer base)	PNC 206179	❑
• Kit 4 feet for concrete installation (not for 900 line free standing grill)	PNC 206210	❑
• 2 supports with side runners for 4 GN 1/1 containers for open base cupboards (multifunctional cookers, solid top and gas ranges with cupboard)	PNC 206244	❑
• Flue condenser for 1 module, 150 mm diameter	PNC 206246	❑
• Pair of side kicking strips	PNC 206249	❑
• Electric heating kit for cupboards	PNC 206259	❑
• Single burner smooth plate for direct cooking - fits frontal burners only	PNC 206260	❑
• Single burner ribbed plate for direct cooking- fits frontal burners only	PNC 206261	❑
• Single burner radiant plate for pan support	PNC 206264	❑
• Pair of side kicking strips for concrete installation	PNC 206265	❑
• Water column with swivel arm (water column extension not included)	PNC 206289	❑
• Water column extension for 700 line	PNC 206291	❑
• Stainless steel double grid for 2 burners	PNC 206297	❑
• Chimney upstand, 1200mm	PNC 206306	❑
• Right and left side handrails	PNC 206307	❑
• Door for open base cupboard	PNC 206350	❑
• Wok pan support for open burners (700/900)	PNC 206363	❑
• Base support for feet or wheels - 1200mm (700/900)	PNC 206368	❑
• Base support for feet or wheels - 1600mm (700/900)	PNC 206369	❑
• Base support for feet or wheels - 2000mm (700/900)	PNC 206370	❑
• Rear paneling - 1200mm (700/900)	PNC 206376	❑
• Kit town gas nozzles (G150) for 700 gas range	PNC 206387	❑
• Chimney grid net, 500mm (700XP/900)	PNC 206402	❑
• Kit G.25.3 (NI) gas nozzles for 700 top and - freestanding on oven - gas cookers	PNC 206460	❑
• 2 side covering panels for free standing appliances	PNC 216000	❑
• Frontal handrail, 1200mm	PNC 216049	❑
• Frontal handrail, 1600mm	PNC 216050	❑
• Stainless steel wok pan, design in line with wok cuvette	PNC 911000	❑
• Pressure regulator for gas units	PNC 927225	❑

The company reserves the right to make modifications to the products without prior notice. All information correct at time of printing.

2024.10.08

Modular Cooking Range Line 700XP 6-Burner Gas Range on Gas Oven with Cupboard

Front

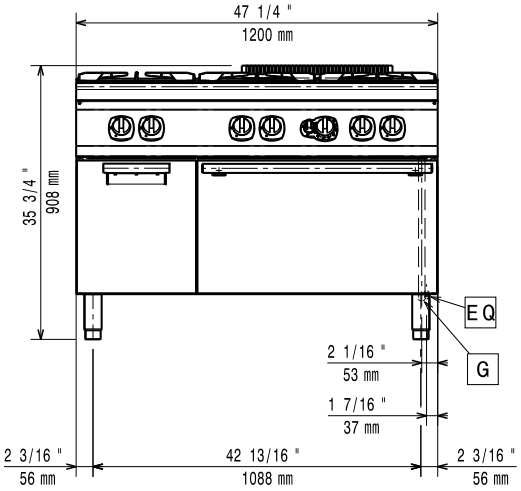

Side

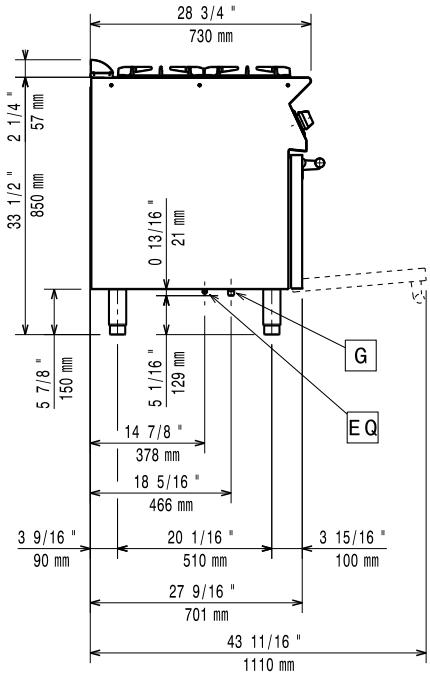

G = Gas connection

Top

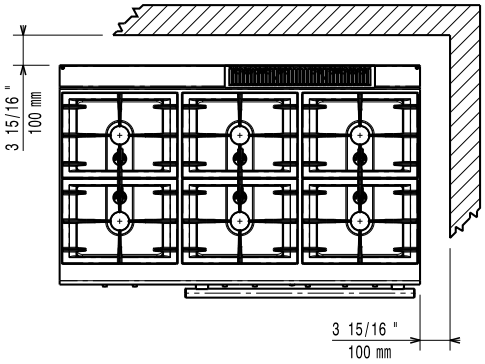

Gas

Gas Power:	
371005 (E7GCGL6C10)	39 kW
Standard gas delivery:	Natural Gas G20 (20mbar)
Gas Type Option:	LPG;Town
Gas Inlet:	1/2"

Key Information:

Front Burners Power:	5.5 - 5.5 kW
Back Burners Power:	5.5 - 5.5 kW
Middle Burners Power:	5.5 - 0/5.5 - 0 kW
Back Burners Dimension - mm	Ø 60 Ø 60
Front Burners Dimension - mm	Ø 60 Ø 60
Middle Burners Dimension - mm	Ø 60 Ø 60
Oven working Temperature:	110 °C MIN; 270 °C MAX
Oven Cavity Dimensions (width):	540 mm
Oven Cavity Dimensions (height):	300 mm
Oven Cavity Dimensions (depth):	650 mm
External dimensions, Width:	1200 mm
External dimensions, Depth:	730 mm
External dimensions, Height:	850 mm
Storage Cavity Dimensions (width):	330 mm
Storage Cavity Dimensions (height):	380 mm
Storage Cavity Dimensions (depth):	640 mm
Net weight:	120 kg
Shipping weight:	130 kg
Shipping height:	1090 mm
Shipping width:	820 mm
Shipping depth:	1300 mm
Shipping volume:	1.16 m³

If appliance is set up or next to or against temperature sensitive furniture or similar, a safety gap of approximately 150 mm should be maintained or some form of heat insulation fitted.

Certification group:	N7CG

The company reserves the right to make modifications to the products without prior notice. All information correct at time of printing.

2024.10.08